Quantum Automation TECH CORNER with Alex Stipe

December 15, 2010

Low Bandwidth and High Quality Surveillance with H.264 Video

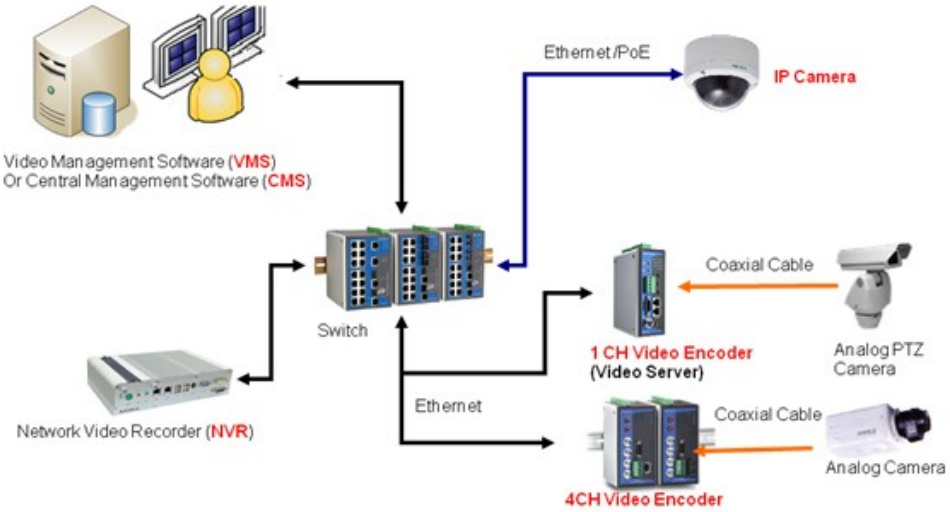

As automation equipment becomes more prevalent, video surveillance becomes increasingly important in today's industrial workplaces. This is due to the fact that as facilities become more automated, there is less need for humans on-site to monitor a particular system. Although the concept of replacing employees with equipment is great for increasing efficiency, repeatability, and lowering costs, it's hard to replace the safety inherent in having a real set of eyes and ears on-site. Thankfully, with today's advanced H.264 video processing technology, you can easily implement a faster, more reliable, and safer surveillance system than ever before.

Since the release of MOXA's VPort 461 at the beginning of the year, I've received many questions from customers, asking "What's the big deal?" Well, this month I've decided to address those questions by discussing two of the main video compression standards used today; MJPEG and H.264, and why the latter is the best choice for high reliability and low bandwidth video streaming.

What are Compression Standard Specifications?

Video compression standards were created to reduce the amount of data required to digitally represent video images. Their main purpose in industrial applications is to lower bandwidth requirements for a Local Area Network carrying one or more video streams. This is especially important in the industrial automation industry because these LANs also carry control and monitoring data for HMIs and SCADA systems. All compression standards represent a balance picture quality and compression ratio. In general, as compression increases, quality decreases at a high rate. Let's take a closer look at how MJPEG and H.264 handle image processing and how they stack up against each other.

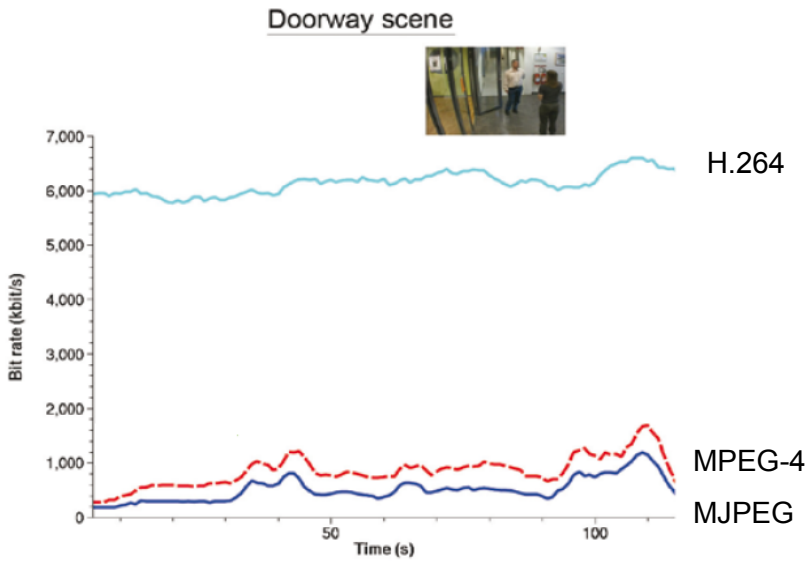

This figure shows the bit rate over 120 seconds for encoding the same analog video clip with three standards; H.264, MPEG-4, and MJPEG, at a fixed bandwidth

1. Motion JPEG (MJPEG)

The MJPEG standard was announced by the Joint Photographic Experts Group (JPEG) in 1992 and was approved by ISO in 1994. As you may have guessed from the name, this group also created the compression standard JPEG used extensively in digital cameras. MJPEG works by slicing an analog video signal into a series of images. The images are individually compressed with the JPEG standard where each image corresponds to one frame of video. The data is then ready to transmit to a device or piece of software for decoding.

MJPEG encodes each frame entirely

a. Advantages:
   i. Low complexity compression technique means that hardware and processing requirements are low. They are also lowered because each frame (small packet size) is compressed independently (intraframe-only).
   ii. High error tolerance since each frame is processed individually. An error would only affect one frame and would therefore be less noticeable.
b. Disadvantages:
   i. It's a lossy compression method meaning that any information lost in the compression sequence cannot be recovered, even if you decompress it. Therefore your image can never get better, only worse, once it's been compressed with the MJPEG standard.
   ii. Efficiency is limited to 1:20 or lower
   iii. Poor compression performance leads to high bandwidth requirements. A dedicated network is usually necessary for reliable performance.
   iv. Poor quality for sharp edges and abrupt changes in color and brightness.

2. What is the difference between MJPEG and MPEG4

a. MJPEG (Motion JPEG) is a video codec that compresses each video field separately using JPEG. Detailed information about MJPEG can be found at the following link:
b. MPEG-4 is based on MPEG-1, MPEG-2 technology. It treats each scene as a combination of all audiovisual media objects, such as audio, video, 2d/3d graphics, etc.

3. H.264

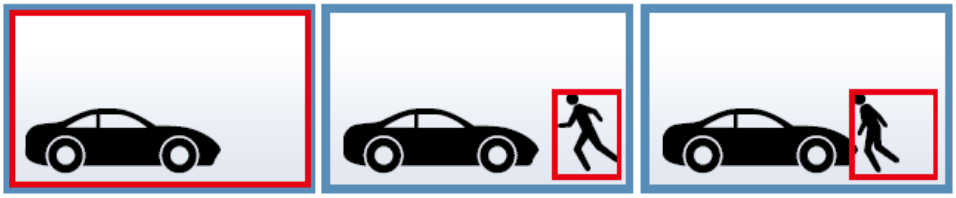

H.264 and its parent standard MPEG-4 encode frame-to-frame differences.

The H.264 compression standard was designed for efficiency and reliability by ITU and ISO/IEC in 2003. It's also known as MPEG-4 part 10 because it's actually a small portion of the MPEG-4 standard. This is why the name H.264/MPEG-4 is synonymous with H.264 and they can be used interchangeably. Instead of using an intraframe-only method (individually compressed frames), H.264 uses a multi-picture inter-picture prediction scheme. This works by predicting groups of pixels in the current frame by referencing similar regions in previously-coded frames. If the frames are the same, then data for that "block" does not need to be re-transported (see the above figure

for a visual representation). This prediction method is the primary reason why H.264 sees such an increase in efficiency which is especially apparent in fixed camera applications since most portions of the background change infrequently.

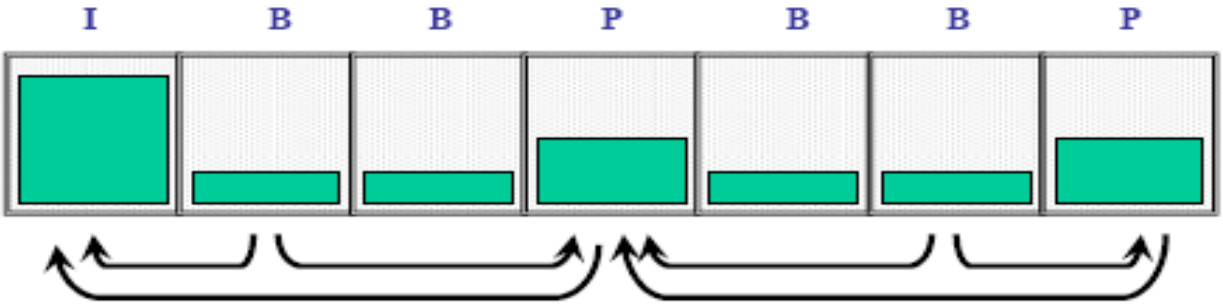

This figure shows the basic prediction scheme for the MPEG-4 compression standard and the amount of data required to transfer each one. I-Frames: intra pictures (key frame, all MJPEG frames are I Frames), B-Frames: Bidirectional pictures which only contain info on what's changed since the I frame was captured, P-Frames: Predicted Pictures created by comparing I- and B-Frames.

Sequence of Events: 1. I-Frame captured and transferred, 2. B-Frames captured and compared to I frame, 3. P-Frame created by comparing B frames to the initial I-Frame and predicting what will happen next, 4. Process repeats

a. Advantages:
    i. It features a higher compression ratio than MPEG-4, smaller file size
    ii. Motion compensation, predicts where a group of blocks is moving, creating a clear image of objects in motion.
    iii. Deblocking filter allows for higher compression ratios without any perceived loss in image quality.
    iv. Object-based image coding, requires only a portion of the image to be transferred for each frame.
    v. High interactive functionality, allows for sectional alarming
b. Disadvantages
    i. High processing and hardware requirements due to complex compression techniques
    ii. Limited yet growing Video Management Software support (VMS)
    iii. Higher hardware costs
    iv. Not backwards compatible with MPEG-4 devices

Conclusions:

Although both standards work very well, at around five times the bitrate of MJPEG, a video encoder featuring the H.264 standard is your best choice for fast and reliable video streaming.

1. H.264:
    a. Great for applications that use the same network for both video and other types of data. Especially good for multiple channels of video.
2. MJPEG:
    a. Best for dedicated video networks or applications with few cameras or bandwidth intensive applications
    b. Good for applications where image quality is less of a concern and where images will not need to be decompressed to a higher resolution.

Recommended Hardware:

MOXA VPORT 461:

- Great for simple migration from a CCTV system to an IP surveillance system, no need to replace the original equipment
- Dual Codec for H.264 and MJPEG
- **3 simultaneous streams**, for using the same video stream for multiple purposes such as DVR, live viewing, and video analysis.

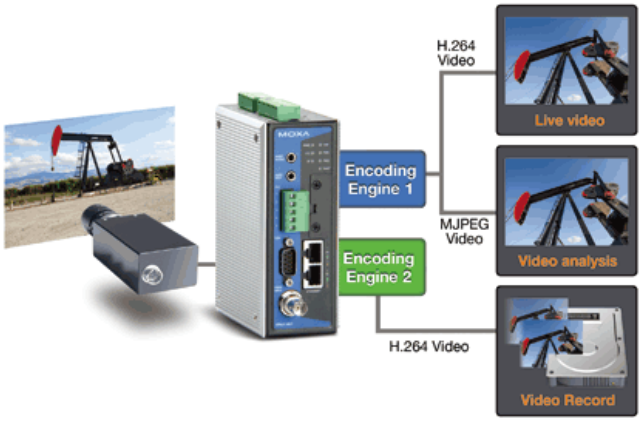

- SD/SDHC support (card extra)
- Two Ethernet ports for cascading or port redundancy
- -40 to 75°C extended operating temperature (optional)
- Additional COM port for serial device connectivity
- Two way audio
- Pre-alarm record
- Transparent PTZ control
- Modbus TCP support
- VPort SDK PLUS (free)
- Video latency under 200 ms

Call Today to start configuring your surveillance system!

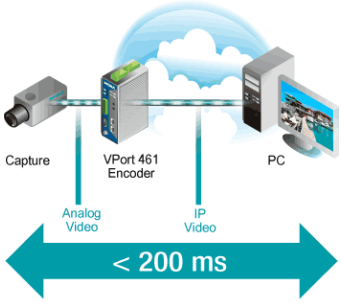

Latency

Low Latency for Real-Time Security

H.264 provides extra low latency to ensure real-time video operation for IP surveillance. The VPort 461 ensures end-to-end latency under 200 ms, with the time measured from video capture, encoding, transmission, decoding, and display to the operator in a reliable 100 Mbps network environment. Such a low latency is particularly important to provide online monitoring and operation applications with real-time benefits.

Additional Resources:

1. http://www.moxa.com/event/net/2010/vport_461/Index.htm
2. http://books.google.com/books?id=8jxbbRKVbkIC&pg=PA56&dq=mjpeg&hl=en&ei=Rcb2TKKpFZL2tgPqq4jlCw&sa=X&oi=book_result&ct=result&resnum=3&ved=0CDAQ6AEwAg#v=onepage&q=mjpeg&f=false
3. http://bks1.books.google.com/books?id=LEjJYki9U0wC&printsec=frontcover&img=1&zoom=5&edge=curl&sig=ACfU3U3Nat1vzoUHCD6gltBcrZ4hPQgWtA
4. http://bks7.books.google.com/books?id=8VTWzM9o5pQC&printsec=frontcover&img=1&zoom=5&edge=curl&sig=ACfU3U3M3TnCpOOH-WwTxjbeyvXtDbupPA
5. http://www.salientsys.com/files/whitepaper/Understanding%20H%20264.pdf