Quantum Automation TECH CORNER with Alex Stipe

July 28, 2010

Electrical Interference

Do you use analog I/O or any type of copper-based medium for data transmission? If so, then you are susceptible to interference caused by manmade devices or even natural sources such as the Sun. Today, sophisticated electronics are being integrated into everything from our phones to door locks. We must plan ahead to prevent these electronics from negatively influencing each other, i.e. interference.

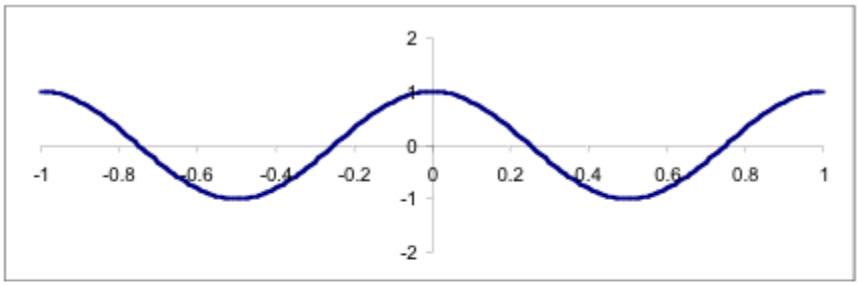

(a)

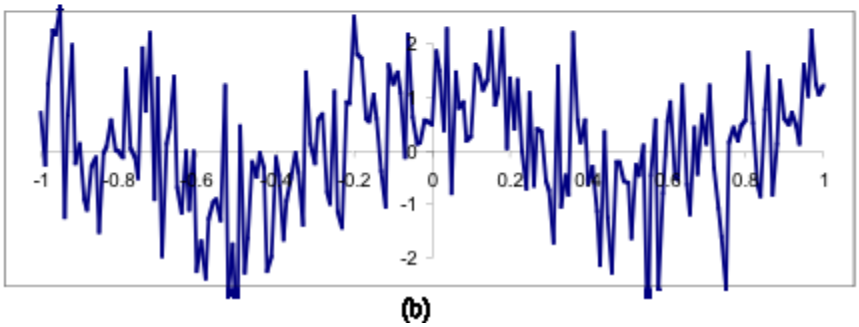

(b)

In his month's TechCorner, I will cover the various types of electrical interference along with their causes, effects, and what you can do to protect your system from them.

What is Electrical Interference?

Dictionary.com defines electromagnetic interference as, "The distortion or interruption of one broadcast signal by others" This means that when two signals (of any type) come in

contact, they will combine to form a new one or even cancel each other out. To gain some perspective as to what this means, the idea can be applied to physical systems such as waves in a body of water, as well as electronic systems like transmitters and receivers.

Industrial automation, control, and networking devices are more susceptible to interference than most commercial devices. This is due to their operating environment, which usually means they're near devices running on high voltage or current. There are four main coupling paths through which interference can affect electronics. They are:

1. Conductive coupling – When electric current is transferred through a conductive medium (physical coupling) (example: power supply and ground wires)
2. Radiation – Coupling via interacting electromagnetic fields
3. Capacitive coupling – An electric field (capacitance) between circuit nodes, i.e. a voltage difference between separate conductors
4. Inductive coupling – When current flow in conductors generate a magnetic field and this magnetic field affects that of another device. (transformer)

Radiation, the most common cause of copper-based communication issues, involves two different but correlated fields: electric (E) and magnetic (H). The Maxwell-Faraday equation proves that a changing magnetic field (H) creates an electric field (E) and vice versa.(Note: This is actually the rule that defines how and why electric motors and generators work)

What Causes Interference in Industrial Settings?

There are many sources of interference in places such as factories, manufacturing facilities, power substations, and even outdoor monitoring stations. Below, I have listed the most common ones you will encounter and should be aware of.

1. Ground Loops

A ground loop occurs when there is more than one conductive path to ground between two or more pieces of equipment. This creates a conductive "loop" that can act like an antenna and pick up interference currents easily. These currents will create voltage sources which add to the measured signal on its way to the receiving device. The new signal is indistinguishable from the original and can cause a controller to perform an improper control action. Ground loops are particularly bad for communications.

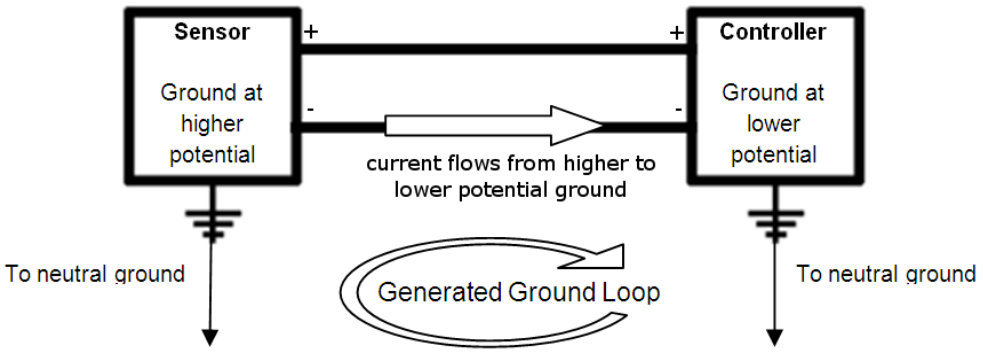

2. Switching inductive loads

a. Electric motors
   i. In brushed DC motors, sparks are generated between the brushes and commutator as the armature's state changes.

Y557-A772 - Inverter-duty AC motor

b. Transformers
   i. Internal inductors create and change the magnetic field surrounding the transformer, influencing any electronic device within the immediate area.

PH500MGJ – 240x120 VAC 50/60 Hz control transformer

3. Switched-mode Power Supplies

They transform voltage from one level to another very rapidly. The quick voltage and current changes produce magnetic waves that propagate outwards and can cross copper media communication lines. This causes interference due to inductive coupling.

PSP24-120S – 24VDC (adjustable), 5 A switching power supply

4. Wireless devices

a. 802.11b/g devices
b. Bluetooth devices
c. Cordless telephones

5. **Space Weather, Geomagnetic, and Atmospheric Conditions**
    a. Natural sources of EMI on Earth include lightning which is a high amplitude electrostatic discharge. There are also extraterrestrial sources such as starts and galaxies that emit radiation and electromagnetic waves which can cause interference on Earth.

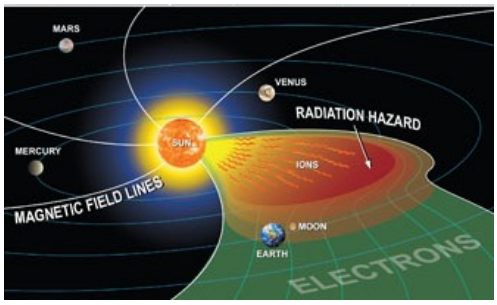

Credits: Southwest Research Institute

How Can EMI be prevented?

6. **Increase physical distance from sources**
    a. The easiest way to avoid radiation and inductive coupling is to move your device away from the source. Magnetic and electric fields dissipate with distance. The farther away from them, the less you will notice their effects.

7. **Electromagnetic shielding**
    a. Use shielded cables such as the DataTuff® Ethernet cables from Belden to reduce noise from interference. Shielded cables use various techniques to stop noise from affecting the signal. The most common shielding involves a metallic tape which surrounds the insulated wires which acts as a Faraday cage which blocks out external electric fields. Click here for info on how Belden's shielding is one of the features that makes their cables superior to the competition.

BELDEN
SENDING ALL THE RIGHT SIGNALS

8. Signal isolation

Signal isolators use one of many electronic methods to interrupt the connections between two grounds while passing the correct signal with little or no loss of accuracy. Without a way for ground currents to flow, these currents can't induce signal errors.

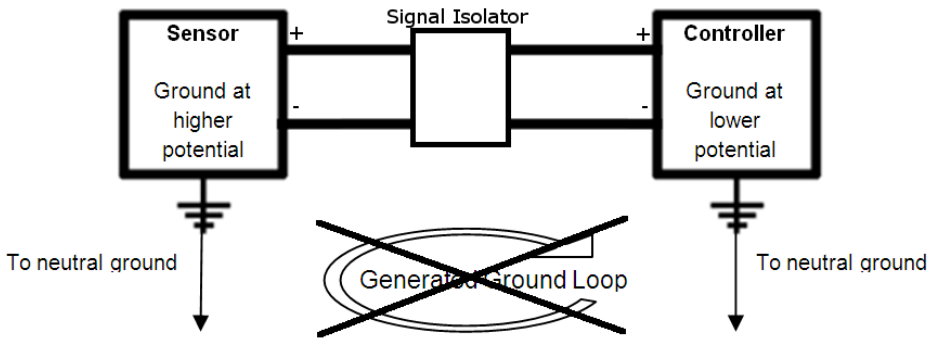

You can implement signal isolation using one of the following types of products: media converters, optical isolators, and signal conditioners.

* Media Converters:

By converting any copper-based communications (RS-232, Ethernet, etc…) to fiber, you break the conductive path for ground loops and other induced noise. This isolates the transmitter and receiver from each other while still ensuring data integrity. You will also be able to enjoy faster and longer distance transmission. (See: MOXA **TCF-90** and **IMC-P101**)

Serial-to-Fiber

MOXA's TCF-90 is a RS-232 to optical fiber media converter. It's compact in size and has 15 KV ESD protection.

Ethernet-to-Fiber

MOXA's IMC-P101 converts Ethernet to fiber and features PoE, a wide temp range, and redundant power inputs.

* Dedicated Optical Isolators:

Optical isolators provide full electrical isolation for data communication by using light to transmit data from one side of the device to the other. This breaks the conductive coupling between transmitter and receiver just like a media converter will.

MOXA's TCC-82 is a 4-channel RS-232 isolator. It features 4x4KV RMS isolation for 1 minute, 15 KV ESD protection, and is port powered.

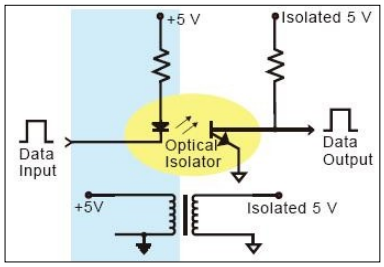

* **Signal Conditioners:**

Normally used to convert or amplify signals, conditioners also feature electrical isolation. The isolation may be optical or magnetic but will break the galvanic path between input and output to reduce or eliminate signal noise.

884116 Signal conditioner and isolator

FC-33 Signal conditioner and isolator

9. Isolated I/O cards

Isolated I/O cards help prevent noise and interference by providing isolated grounding for each input. Listed below are two examples of the various isolated input and output cards for the Productivity 3000. We carry them for the other DirectLogic PLCs as well.

P3-04ADS – 4-channel voltage/current input module, 16 bit resolution

P3-08TRS-1 – 8-point isolated relay output, user replaceable fuses

Additional Resources:

1. NASA Electromagnetic Interference Laboratory
2. Study to Predict the Electromagnetic Interference for a Typical House in 2010
3. eEngineery Glossary
4. Electromagnetic Interference Reduction
5. Introductory Overview of Electrical Instrumentation
6. How Stuff Works – Electromagnetic Interference